RF110127

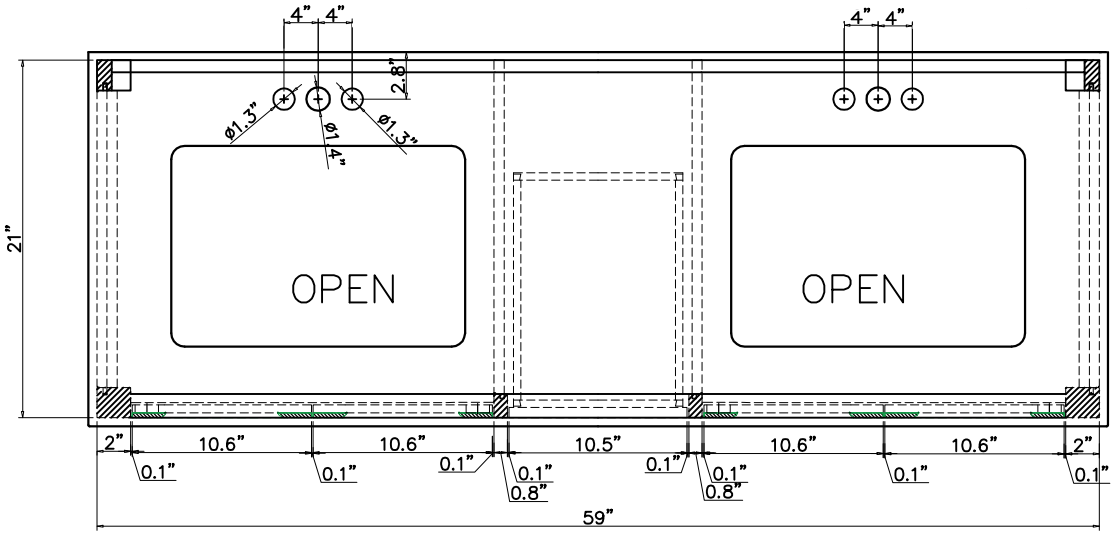
4"
4"
2.8"
ø1.3"
ø1.4"
ø1.3"
21"
OPEN
OPEN
2"
10.6"
10.6"
10.5"
10.6"
10.6"
2"
0.1"
0.1"
0.1"
0.1"
0.8"
0.1"
0.1"
0.8"
0.1"
0.1"
59"

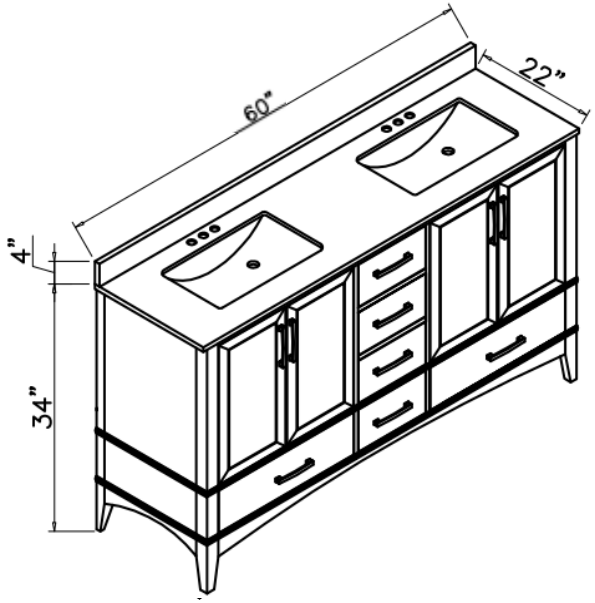
60"
22"
4"
34"

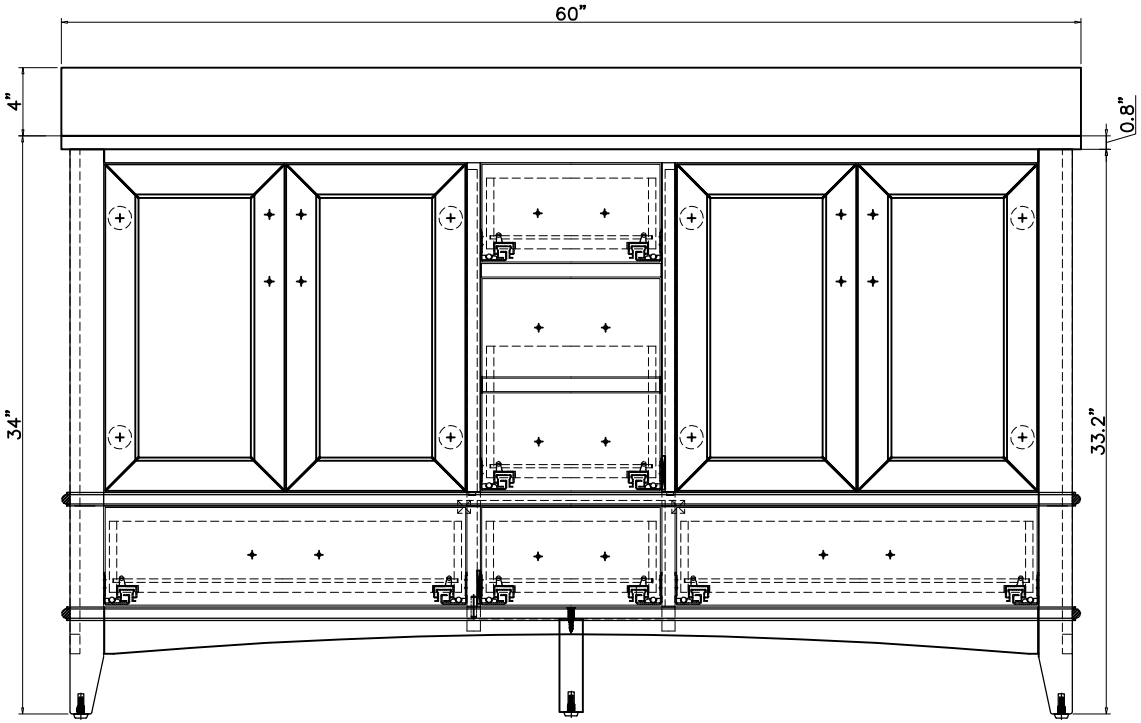
60"
4"
0.8"
34"
33.2"

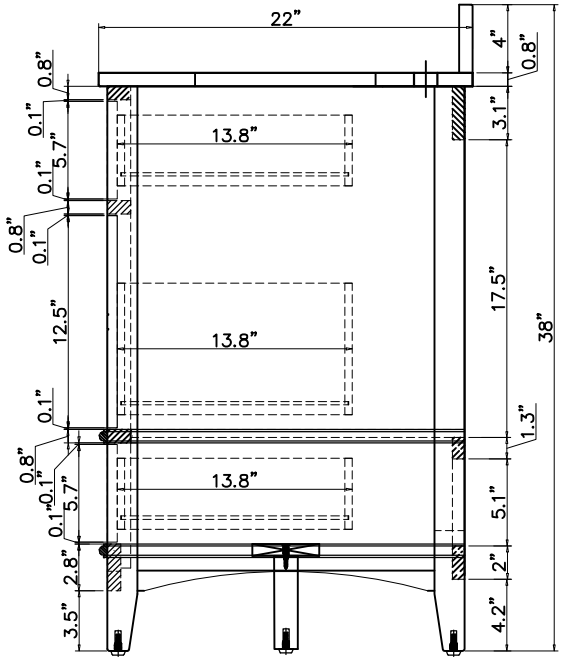
22"
4"
0.8"
0.8"
0.1"
3.1"
13.8"
5.7"
0.1"
0.8"
0.1"
17.5"
38"
12.5"
13.8"
0.1"
1.3"
0.8"
0.1"
13.8"
5.7"
0.1"
5.1"
2.8"
2"
3.5"
4.2"