Electric Garage Heater

12,000W-/-240V-/-40944-BTU

10,000W-/-240V-/-34120-BTU

INSTALLATION & MAINTENANCE INSTRUCTIONS

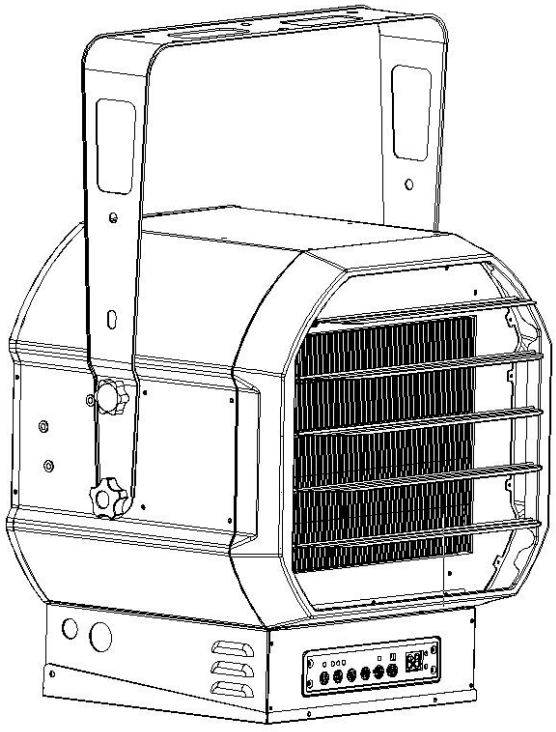

Before the first use of this heater, please read this USER'S MANUAL very carefully. This USER'S MANUAL has been designed to instruct you as to the proper manner in which to assemble, maintain, store, and most importantly, how to operate the heater in a safe and efficient manner. Please keep this manual for future reference.

CONSUMER: Retain this manual for future reference.

IMPORTANT INSTRUCTIONS

when using electrical appliances, basic precautions should always be followed to reduce the risk of fire, electric shock, and injury to persons, including the following

1. Read all instructions before installing or using this heater.
2. This heat er is hot when in use. To avoid burns, do not let bare skin touch hot surfaces. keep combustible materials, such as electrical cords, furniture, pillows, bedding, papers, clothes, and curtain sat least3feet (0.9 m)from the front of the heater and keep them away from the sides and rear.
3. Extreme caution is necessary when any heat er is used by or near children or invalid s and whenever the heat er is left operating and unattended.
4. Always turnoff the power to the heater when not in use.
5. Do not operate any heater after the heater malfunctions, has been dropped or damaged in any manner. Disconnect power atthe service panel and have the heater inspected by a reputable electrician before reusing.
6. DO not use outdoors.
7. This heater is not intended for use in bathrooms, laundry areas and similar indoor locations. Never locate heater where it may fal lint o a bathtub or other water container.
8. Do not insert or allow foreign objects to enter any ventilation or exhaust opening as this may cause an electric shock or fire, or damage the heater.
9. To prevent a possible fire, do not block air intakes or exhaust in any manner. Do not use on soft surfaces, like a bed, where openings may become blocked.
10. A heater has hot and arcing or sparking parts inside. Do not use it in areas where gasoline, paint, or flammable liquids are used or stored.
11. use this heater only as described in this manual. Any other use not recommended by the manufacturer may cause fire, electric shock, or injury to persons.
12. To disconnect heater, turn controls to off, and turnoff power to heater circuit at main disconnect panel.
13. This heater may include a visual alarm to warn that parts of the heater are getting excessively hot. If the alarm illuminates, immediately turn the heater off and inspect for any objects on or adjacent to the heater that may have blocked the airflow or otherwise caused high temperatures to have occurred.**DO NOT OPERATE THE HEATER WITH THE ALARM LIGHT ILLUMINATING.**

PET OWNERS WARNING: The health of some small pets including birds are extremely sensitive to the fumes produced during the first-time use of many appliances. These fumes are not harmful to humans but we recommended that you do not use your heater around birds and small pets during its initial use until the manufacturing corrosion coatings burn off.

SAVE THESE INSTRUCTIONS

⚠ WARNING ⚠

This product can expose you to chemicals including Di iso non ylph tha late (DIN P)which is known to th estate of california to cause cancer and Di-iso decyl pht hala tes (DID P)which is known to the state of california to cause birth defects or other reproductive harm.

TABLE-OF-CONTENTS

ITEM	PAGE
#SPECIFICATIONS	3
SAFETY INFORMATION	3
LOCATING HEATER	4
PRE- INSTALLATION	5
INSTALLATION	6
OPERATING INSTRUCTIONS	10
MAINTENANCE	12
REPLACEMENT PARTS	12
TROUBLESHOOTING	13

SPECIFICATIONS

Rating	AMPS	BTU/hour
12000W 240V 60Hz	50.0	40944BTU
10000W 240V 60Hz	41.67	34120BTU

SAFETY-INFORMATION

⚠ WARNING ⚠

THIS HEATER REQUIRES HARDWIRE INSTALLATION (NO PLUG) .THE INSTALLATIoN OF THIS PRODUCT MUST BE CARRIED OUT BYA CERTIFIED ELECTRICIANAND INACCORDANCE WITH ALL LOCALAND NATIONAL ELECTRICAL CODES.

NOTE: COMPATIBLE WITH A 240V LINE VOLTAGE DOUBLE POLE WALL THERMOSTAT. MUST BE INSTALLED BY A CERTIFIED ELECTRICIAN.

READAND UNDERSTANDALL INSTALLATION &OPERATION INSTRUCTIONS PRIOR TO OPERATING THIS UNIT. OBSERVE ALL SAFETY INSTRUCTIONS.

1. use only copper wires rated for at least 60c.
2. Heater air flow must be directed parallel to or away from adjacent wall.
3. observe al lwall, floor and ceiling clearance requirements.
4. All wiring must be done according to national and local electrical codes. The heater must be grounded as a precaution against possible electrical shock. Heater circuit must be protected with proper fuses.
5. The mounting structure and the anchoring hardware must be capable of supporting the weight of the heater and the mounting bracket(if used).

6. All electrical power must be disconnected atthe main service box, which must be locked before connecting, inspecting, cleaning or servicing the heater. This is an important precaution to prevent serious electric shock.
7. This is heater is not suitable for use in hazardous locations containing explosive liquids or vapour s. This heater has hot or arcing or sparking pads inside. Do not use it in areas where gasoline,paintor flammable liquids are used or stored.
8. This heater is not suitable for use in corrosive atmospheres such as marine greenhouses or chemical storage are 8 feet off the floor. For specific clearances, please see next page.

⚠ WARNING ⚠

IMPROPER INSTALLATION OR FAILURE TO FOLLOW THE PROCEDURES OUTLINED IN THIS INSTRUCTION MANUAL CAN RESULT IN SERIOUS ELECTRICAL SHOCK.

LOCATING HEATER

Install heater away from traffic areas, maintaining clearances stated in figure 2 (below). The air flow direction should not be restricted (ie. by columns or machinery).The air flow should wipe exposed walls rather than blowing directly on them. when more than one heat er is used in an area, heaters should be installed so that the air discharge of each heater supports the air flow of the others, to provide best warm air circulation as shown in figure 3.

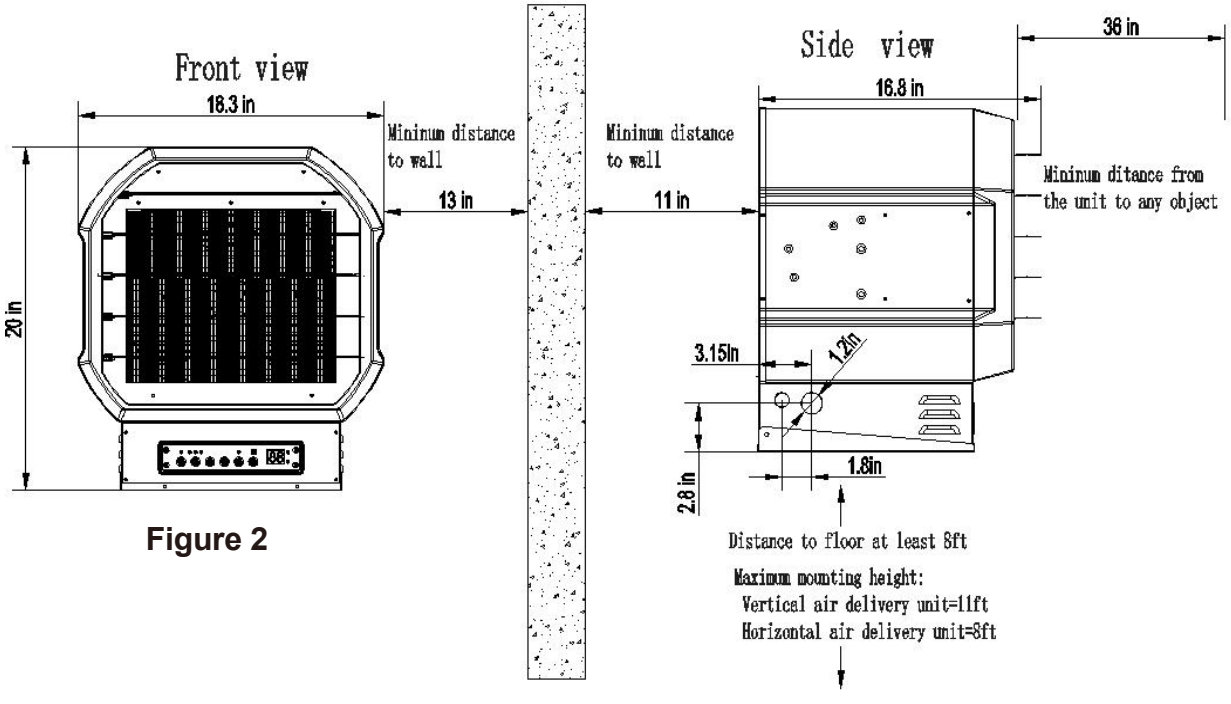

Figure 2

LOCATING-HEATER

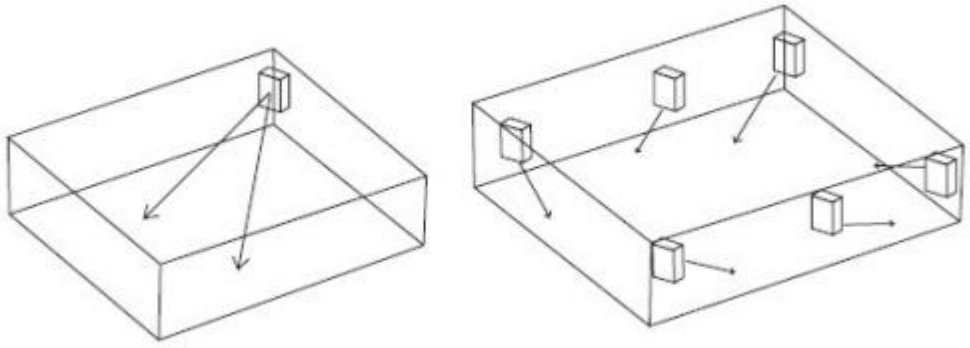

Figure 3

PRE-INSTALLATION

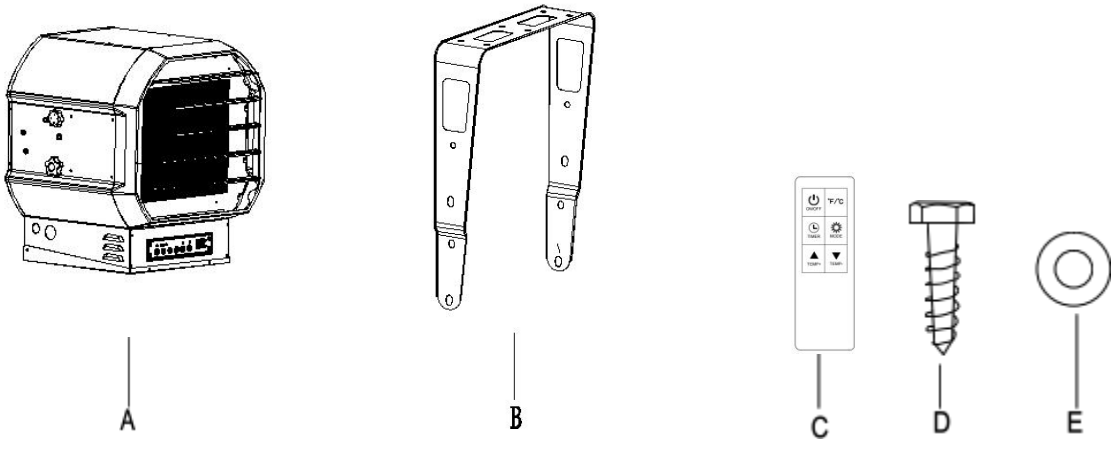

A	Garage Heater	1
B	Mounting Bracket	1
C	Remote Control	1
D	Mounting screw	6
E	Washer	12

INSTALLATION

MOUNTING THE BRACKET

Refer to Figures 4a and 4b.

1. Locate a wood stud in the wood ceiling joist. If you cannot locate a wood stud, you have to install a wood piece on the ceiling as this heater must be securely fastened.
2. Remove the mounting bracket from the heating unit by loosening bracket screws with a wrench and slipping the handle off over the screw heads.
3. Place a washer on screws before inserting through the holes in the mounting bracket and screw them securely into a ceiling joist.

NOTE: If you want to swivel the heater either to the right or left adding a washer to both sides of the bracket is recommended. A longer lag bolt may be required to properly secure the unit. See Figure 4a.

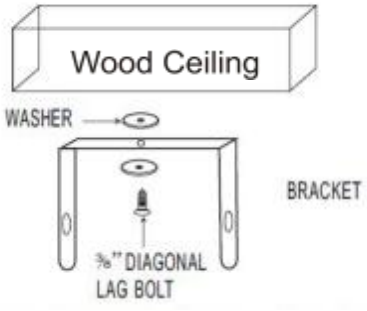

Figure 4a. Single-Screw Mounting

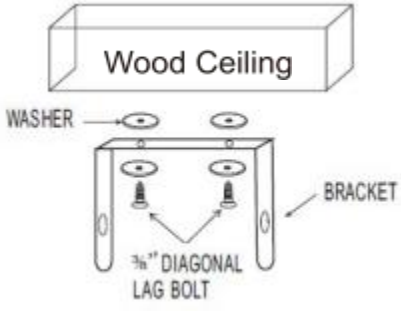

Figure 4b. Double-Screw Mounting

HANGING THE HEATER

1. Attach the heating unit to the mounting bracket.
2. Lift the heater up and into the mounting bracket.
3. Align the bracket screws with the keyhole slots in the mounting bracket.
4. If the heater is to be tilted it must be positioned in the keyhole slots - see figure 5.
5. Tighten the bracket screws with a wrench so the unit is securely suspended at horizontal or vertical level.

Figure 5

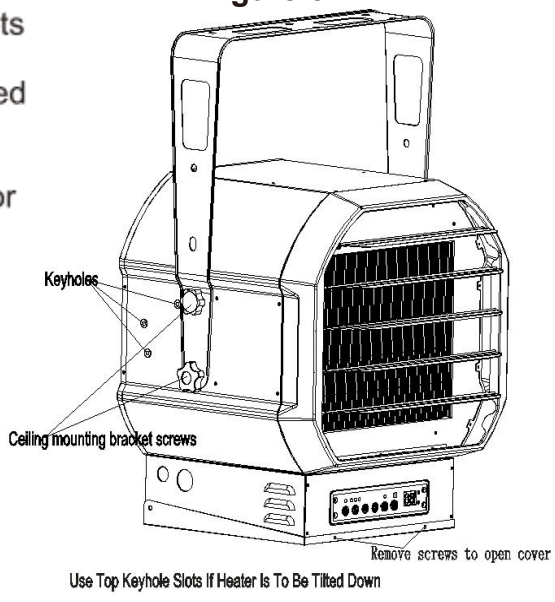

ADJUSTING AIR FLOW DIRECTION

1. To turn the unit when it has been installed with a single lag bolt (as shown in figure 4a), simply turn the entire heater as needed. The unit cannot be turned horizontally if it has been installed with 2 lag bolts.
2. To tilt the unit vertically, loosen the bracket screws (see figure 5).

NOTE: For the heater to be tilted vertically, it must be mounted in bottom keyhole slots of mounting brackets to maintain adequate clearance and prevent possibleoverheating.

Figure 6

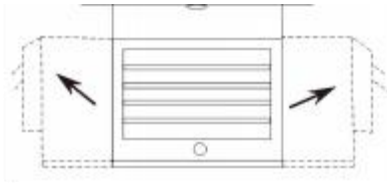

3. Adjust louvers to the desired position (see Figure 6).

NOTE: The louvers are designed so they cannot be completely closed. Do not attempt to bypass this feature; damage to the unit can result.

⚠ WARNING ⚠

TO PREVENT POSSIBLE ELECTRIC SHOCK, DISCONNECT POWER TO THE HEATER AT THE MAIN SERVICE BOX BEFORE ATTEMPTING TO ADJUST THE HEAT OUTPUT OF THIS UNIT.

MULTIPLE VERTICAL ANGLES

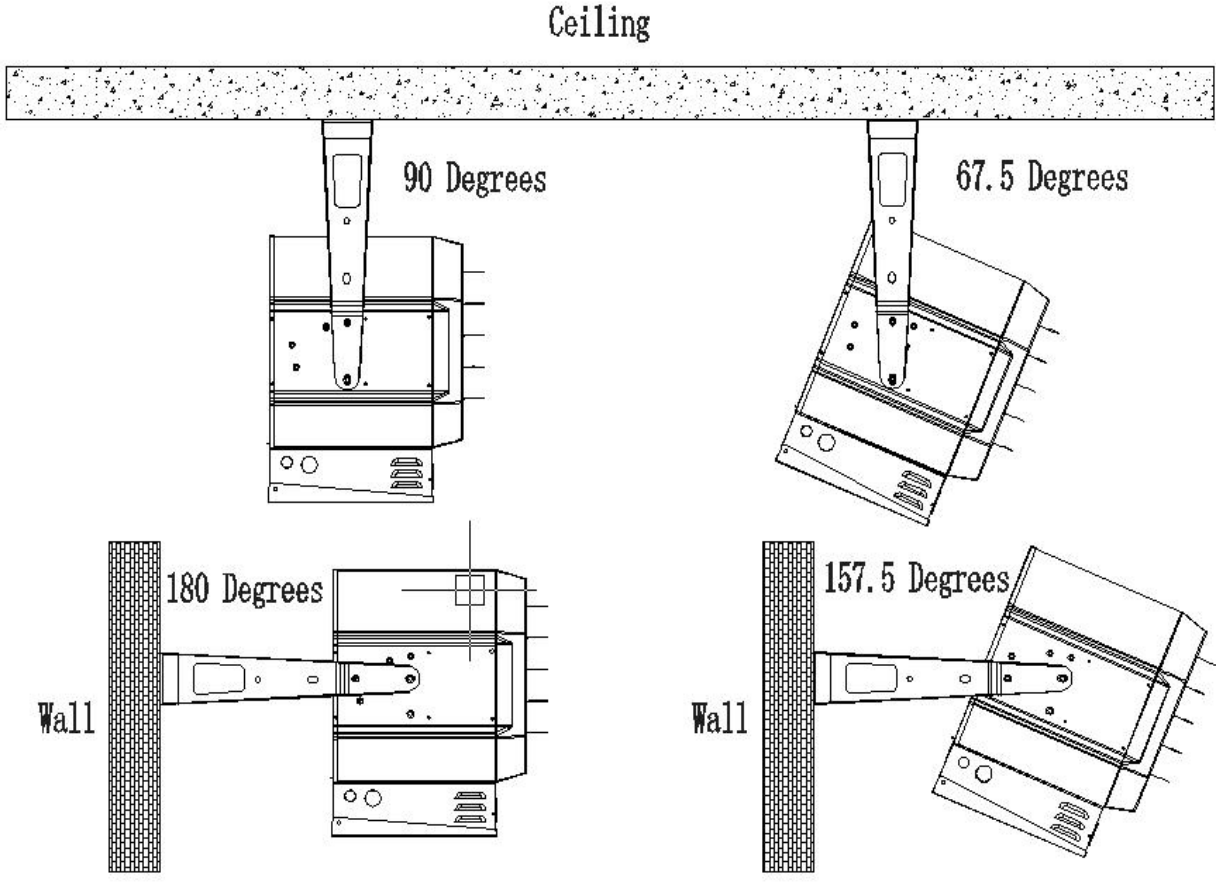

CONNECTING THE POWER

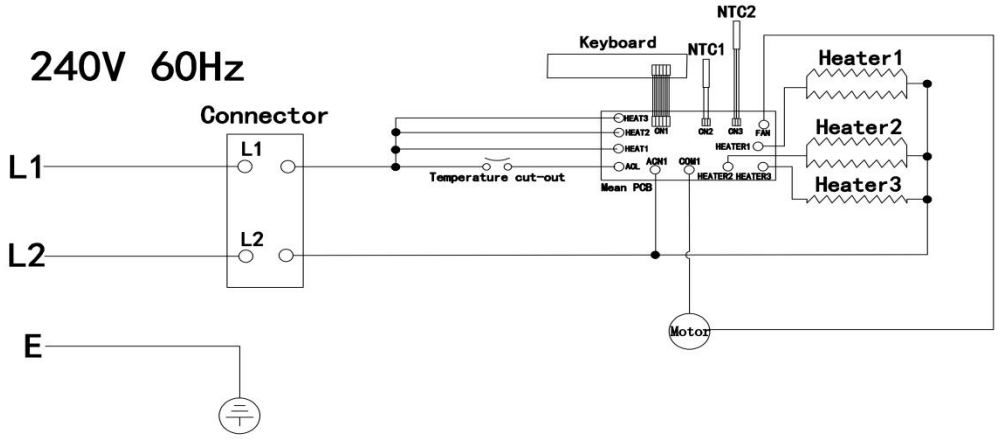

Rating	HEATER1	HEATER2	HEATER3
12000W 240V 60Hz	2400+2400=4800W	2400+2400=4800W	2400W
10000W 240V 60Hz	2000+2000=4000W	2000+2000=4000W	2000W

INSTALLATION

⚠ WARNING ⚠

THIS APPLIANCE MUST BE GROUNDED!

THE APPLIANCE MUST CONNECT TO A CURRENT PROTECTION CIRCUIT OR DEVICE AT 50AMP OR LESS BEFORE BEING CONNECTED TO POWER SUPPLY!

1. Remove the screw from the front of the unit to connect the power to the heater.
2. Attach the cable connectors to the unit (see Figure 7)and slide the 10-gauge wire through the cable connector.

NOTE: All wiring must be carried out by a certified Electrician and must be in accordance to national and local electrical codes. For certain applications, conduit may be required, see Figure7. check local electrical codes. If you run the wiring in conduit and wish to be able to turn the heater be sure to purchase enough flexible conduit to allow the heater to be turned.

3. connect the wire to the power block located in the base of the heater-see Figure7.

4. Turn on the power at the main service.

⚠ WARNING ⚠

HIGH TEMPERATURES – RISK OF FIRE. KEEP FLAMMABLE MATERIALS, SUCH AS FURNITURE, PILLOWS, BEDDING, PAPERS, CLOTHES, ELECTRICAL CORDS AND CURTAINS AT LEAST 3 FT. (0.9 M) FROM THE FRONT AND TOP OF THE HEATER AND KEEPTHEM AWAY FROM THE SIDES AND REAR. TO REDUCE THE RISK OF FIRE, DO NOT USE IT IN AREAS WHERE GASOLINE, PAINT OR FLAMMABLE LIQUIDS ARE USED OR STORED.

⚠ WARNING ⚠

TO REDUCE THE RISK OF FIRE, DO NOT STORE OR USE GASOLINE OR OTHER FLAMMABLE VAPORS AND LIQUIDS IN THE VICINITY OF THE HEATER.

INSTALLATION

CONNECTING THE POWER

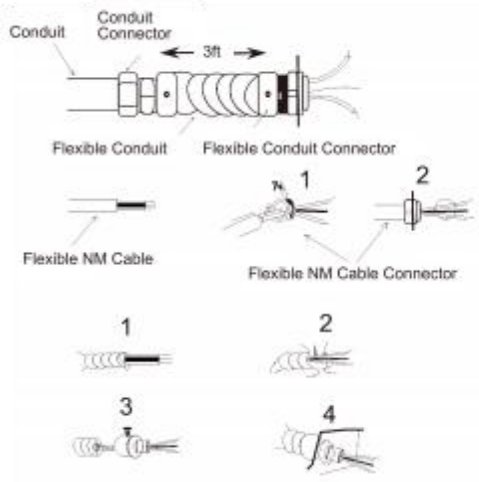

Connectors, cable, and hardware used to wire the heater

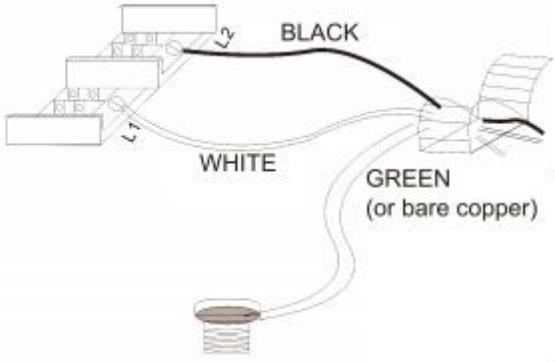

Figure7

OPERATING-INSTRUCTIONS

⚠ WARNING ⚠

THE HEATER MUST BE PROPERLY INSTALLED BEFORE IT IS USED.

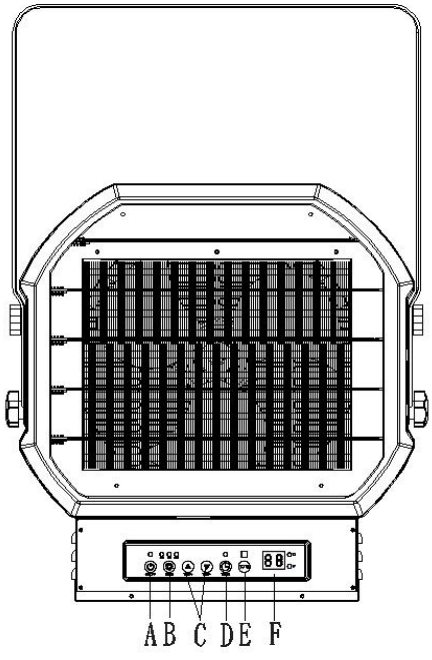

A:Power control
B: Heating selection
C: Temp+ : Temperature up
Temp- : Temperature down
D: Timer selection
E: °F/℃ selection
F: Display

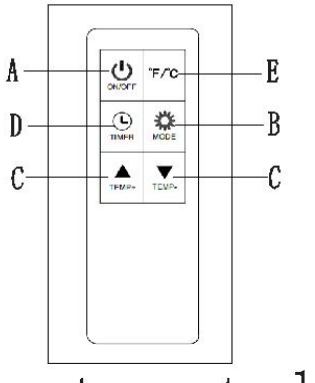

Remote control

OPERATING-INSTRUCTIONS

WARNING: the heater must be properly installed before it is used.

1. **Setting The Power**

Press the ON/OFF power button to turn on the heater. It will operate on HIGH setting continuously. If you want to change the heat setting to Mid /Low or Fan , press the MODE button on either the heater or the remote. The fan will start running about5-7 seconds after initial start to push the heat out.

2. **Setting The Temperature**

The temperature setting can be adjusted between 45°F (7°C) to 95°F (35°C). To change the temperature, press the TEMP+ or TEMP- buttons on either the heater or the remote. The temperature display will blink while it is being adjusted. When the desired temperature is reached, it will take about 5 seconds for the unit to accept the setting. Once the display stops flashing, the room temperature will reappears on the LED screen to indicate the desired temperature is set.

NOTE: To maintain the set temperature, the heater will cycle on and off, staying in the power setting where it is in either LOW MID and HIGH mode. The heater will reach the set temperature faster in HIGH setting in comparison to LOW or MID setting.

3. **Setting The Timer**

The timer function allows you to set the length of operation from 1 to 12 hours. Each time the TIMER button is pressed the length of operation will increase an hour. The duration the timer is set for will be displayed on the LED screen in hour increments. To turn the timer function off, press the TIMER button continuously until the LED screen displays “0”.

NOTE: The timer function is not an excuse to leave the heater unattended.

4. **Setting The Fahrenheit Or Celsius Display**

Press the °F /°C button on either the heater or the remote to switch the display between Fahrenheit and Celsius.

5. **Thermal Cut-Out**

The heater is equipped with a thermal cutout which will automatically turn off the heater in the event of overheating. After the unit has cooled back down to a normal level, the heater will turn ON again , but the reason of the overheating must be determined and corrective action must be taken before further operation.

NOTE: The heater may smoke slightly on first time operation. It is caused by residual cleaning agents used to clean the element when heater is manufactured. This is normal and does not indicate a problem with the unit. The condition will stop after the heater has been in operation for a few minutes.

N**OTE:** Once this heater is turned off, the fan will coninue working for a short while to cool down the heating element and there will be a 90 seconds countdown on the digital display; then the fan will automatically turn off. This feature helps maximize the heater’s life.

MAINTENANCE

1. Before cleaning, make sure the power has been turned off at the circuit breaker panel and that the heating element of the heater is cool.
2. To maintain the external appearance of the heater, the unit occasionally needs to be wiped with a dry duster. During the summer months, or at other times when the appliance is not in use and is completely cold, it should be the wiped over with a damp cloth.
3. Do not use abrasive clearing powders or furniture polish. Do not use chemical or abrasive products, metallic scourers and so on, which may deteriorate the surface, to clean the appliance.
4. During the summer months, or at other times when the appliance is not in use, disconnect the power supply. Keep the appliance in a dry and cool place.
5. All other servicing should be performed by qualified service personnel. Do not try to repair the heater yourself.

NOTE: The motor is permanently lubricated, and no further lubrication is needed.

PARTS-LIST

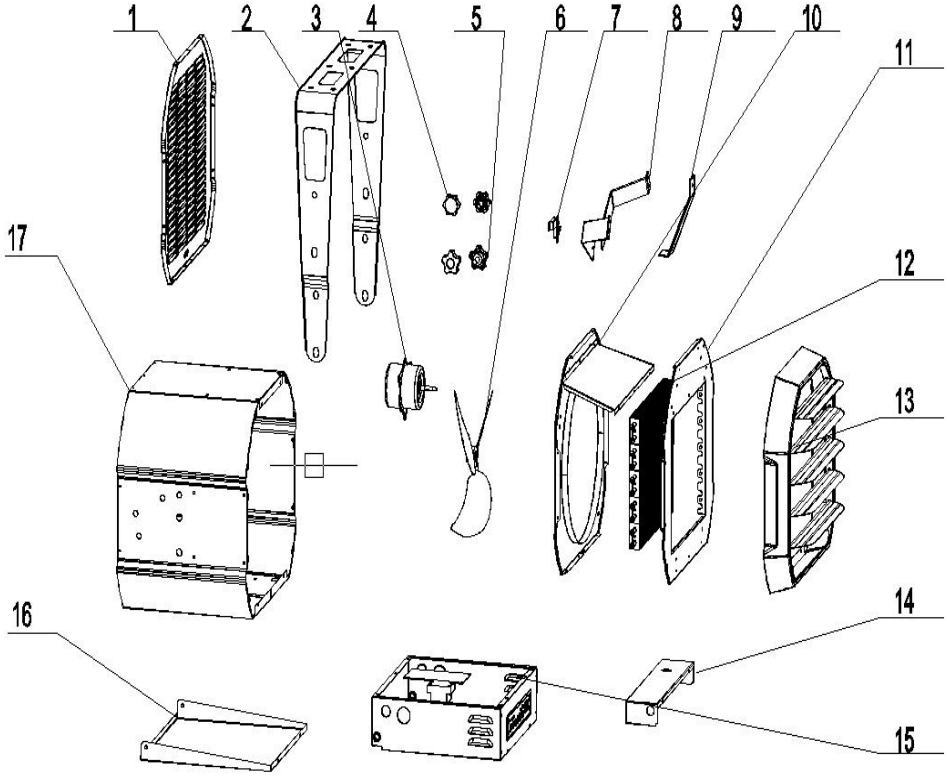

Part	DESCRIPTION	QUANTITY	PART#
1	Back cover	1	GH02-0001
2	Ceiling fixing bracket	1	GH02-0002
3	Moter	1	GH02-0003
4	M8 Screw	2	GH02-0004
5	M10 Screw	2	GH02-0005
6	Fan blade	1	GH02-0006
7	NTC Bracket	2	GH02-0007
8	Motor bracket top	2	GH02-0008
9	Motor bracket bottom	1	GH02-0009
10	Air duct panel assy	1	GH02-0010
11	Heater bracket	1	GH02-0011
12	Heating element	1	GH02-0012
13	Decorate frame assy	1	GH02-0013
14	Air duct base baffle	1	GH02-0014
15	Cotrol housing assy	1	GH02-0015
16	Control housing cover	1	GH02-0016
17	Housing	1	GH02-0017

TROUBLESHOOTING

ERRORCODE	Possible Cause	Recommended Solution	Clearing Error Codes
E1 External temperature sensor open-circuit（CN2）	Detached or loose Connection at room temperature sensor	Disconnect power! Detach fan grille by removing retaining screws. Locate temperature sensor thermocouple on housing (below the fan grille). Ensure wire pair and temperature sensor "tip" are free of damage. Re-attach grille by re-installing screws. Open hinged bottom cover by removing retaining screws. Inspect circuit card assembly (adjacent to supply connection terminal block) for loose or detached "plug-in" electrical connector. Re- attach connectors securely. Close bottom cover and re-install retaining screws.	To clear E1 codes: 1. Power off heater. 2. Switch off breaker (or Remove fuse) 3. Switch on breaker and wait 1 minute 4. Power on heater and follow instruction manual for normal operation If E1 code persists please contact customer service to arrange product return.
E2 Internal temperature sensor open-circuit（CN3）	Detached or loose Connection at room temperature sensor	Disconnect power! Detach fan grille by removing retaining screws. Locate temperature sensor thermocouple on housing (below fan motor bracket). Ensure wire pair and temperature sensor "tip" are free of damage. Re-attach grille by re-installing screws. Open hinged bottom cover by removing retaining screws. Inspect circuit card assembly (adjacent to supply connection terminal block) for loose or	To clear E2 codes: 1. Power off heater. 2. Switch off breaker (or Remove fuse) 3. Switch on breaker and wait 1 minute 4. Power on heater and follow instruction manual for normal operation If E2 code persists please contact customer service to arrange product return.

ERRORCODE	Possible Cause	Recommended Solution	Clearing Error Codes
		detached “plug-in” electrical connector. Re- attach connectors securely. Close bottom cover and re-install retaining screws.	
E3 External temperature sensor short- circuit（CN2）	Water ingress, moisture exposure, or harness abrasion and insulation breakage at the room- temperature sensor wiring	Disconnect power! Detach fan grille by removing retaining screws. Locate temperature sensor thermocouple on housing (below the fan grille). Ensure wire pair and temperature sensor “tip” are free of damage or ingress of water or moisture. Re-attach grille by re-installing screws. Open hinged bottom cover by removing retaining screws. Inspect circuit card assembly (adjacent to supply connection terminal block) for loose or detached “plug-in” electrical connector. Re- attach connectors securely. Close bottom cover and re-install retaining screws.	To clear E3 codes: 1. Power off heater. 2. Switch off breaker (or Remove fuse) 3. Switch on breaker and wait 1 minute 4. Power on heater and follow instruction manual for normal operation If E3 code persists please contact customer service to arrange product return.
No power or low power to heater	Supply connections improperly wired	Consult a licensed electrician. Ensure supply connections L1, L2,and Ground are secure.	Re-start the heater. Follow instruction manual for normal operation.
	Insufficient service loop on supply connections	Consult a licensed electrician. Ensure sufficient service loop in supply wires to maintain secure electrical connections to rotate heater on bracket (particularly when using rigid or semi-rigid conduit).	
	Electrical short to ground	Consult a licensed electrician. Ensure supply connections L1, L2, are not	

ERRORCODE	Possible Cause	Recommended Solution	Clearing Error Codes
		contacting housing (Ground)	
	Inadequate current (Amp) rating on breaker	Consult a licensed electrician. Ensure adequately sized current breaker or fuse per National & Local Electrical Codes.	1. Power off heater 2. Switch off breaker (or Remove fuse) 3. Allow heater to cool (~15 minutes) 4. Switch on breaker and wait 1 minute 5. Power on heater and follow instruction manual for normal operation
	Improper heater shut down	Do not power off heater using circuit breaker. Fan motor is designed to operate for a short period of time after heating element shuts off to prevent an overheat condition.	
	Inadequate copper wire guage for supply connections (Fan operates at reduced speed due to insufficient power input)	Consult a licensed electrician. Ensure adequate wire guage for supply connections.	
	Excessive distance from power source (Fan operates at reduced speed due to current loss)		