Item Number: A04230

WARNING (To reduce the risk of fire, electric shock, or personal injury):

1. We suggest installation by a **licensed electrician**.
2. Please read the instruction carefully and save it as you may need it at a later time.
3. Before you start, **NEVER** attempt any work without shutting off the electricity until the work is done.
   A) Go to the main fuse, or circuit breaker, box in your home.
   Place the main power switch in the "**OFF**" position.
   B) Place the wall switch in the "**OFF**" position.
4. Mounting surface should be clean, dry, flat, strong enough and 1/4" larger than the canopy on all sides. Any gaps between the mounting surface and canopy exceeding 3/16" should be corrected as required.
5. Make sure that the ceiling or wall can stand the weight of the lamp before installation.
6. Make sure the voltage you are using is **120V**. The maximum wattage is **Type ,B,Max 40W** per bulb.
7. Keep the lamp away from acidic and alkaline substances in case of damaging the surface of the lamp.
8. When replacing bulbs, you should turn off or unplug the lamp and you must wait until it is cool as bulbs get hot quickly.
9. The safety instructions appearing in this manual are not meant to cover all possible conditions that may occur. It must be understood that common sense, caution and care must be used with any electrical products.

IMAGE FOR FINISHED PRODUCT:

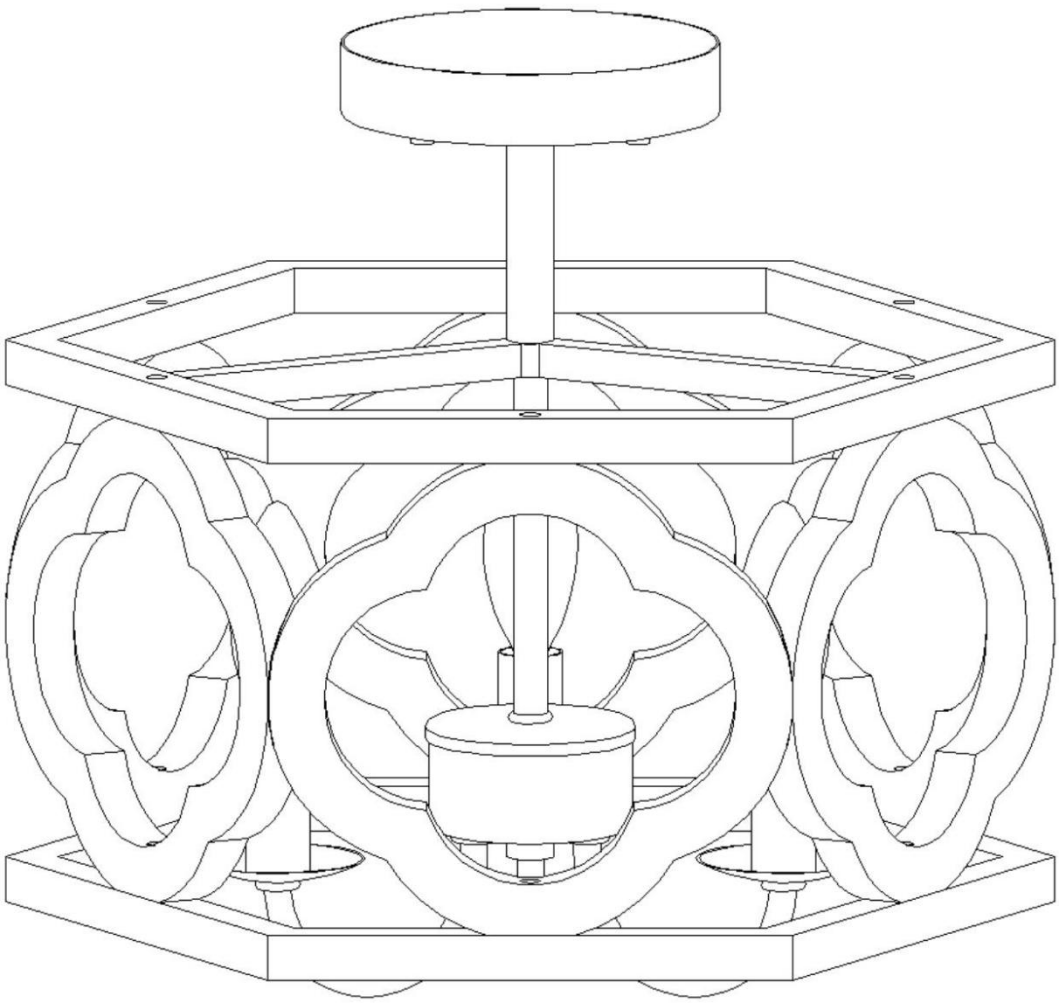

TOOLS REQUIRED (NOT INCLUDED):

Before starting assembly and installation please prepare the needed tools as below picture

		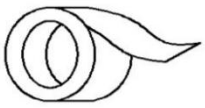	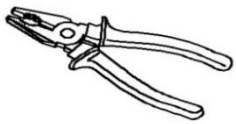	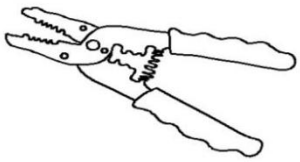
Ladder	Phillips head.flat blade screwdriver	Electrical tape	Pliers	Wire cutter/Stripper

PARTS TYPE & QTY INCLUDING:

(C) Mounting plate (1)
(D) Green ground screw (1)
(E) Canopy (1)
(F) Knob nut (2)
(G) Tube (1)
(H) Upper frame (1)
(I) Stem (1)
(J) Sockets assembly (1)
(K) Socket (3)

ACCESSORIES & QTY ENCLOSED:

(A) Plastic wire connector (3)
(B) Mounting screw (2)

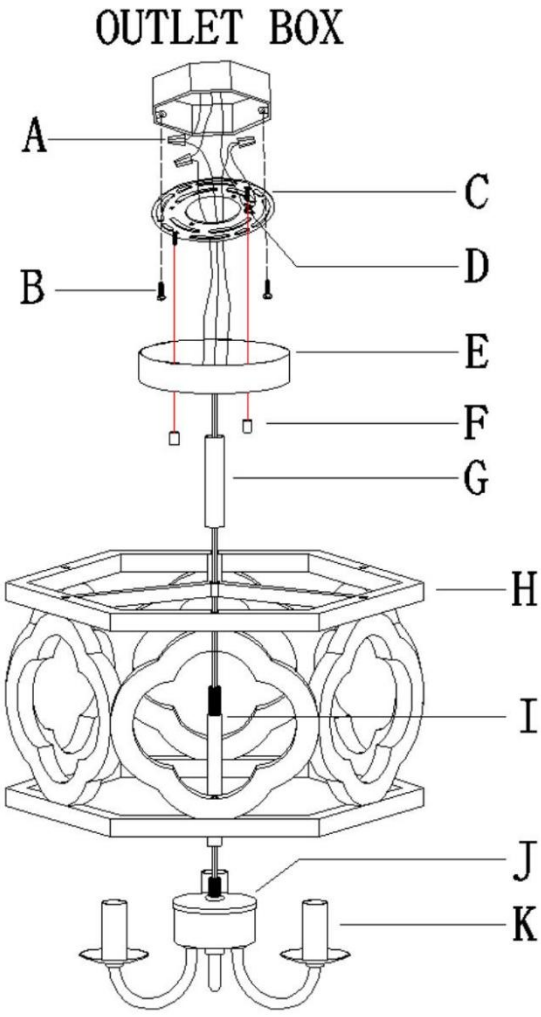

ASSEMBLY & INSTALLATION INSTRUCTIONS:

1. Carefully remove the fixture from the carton and check that all parts and accessories are included as shown in the above illustration.

2. Unscrew knob nuts (F) from canopy (E), then gently remove mounting plate (C) from canopy (E) and set them aside for later installation.

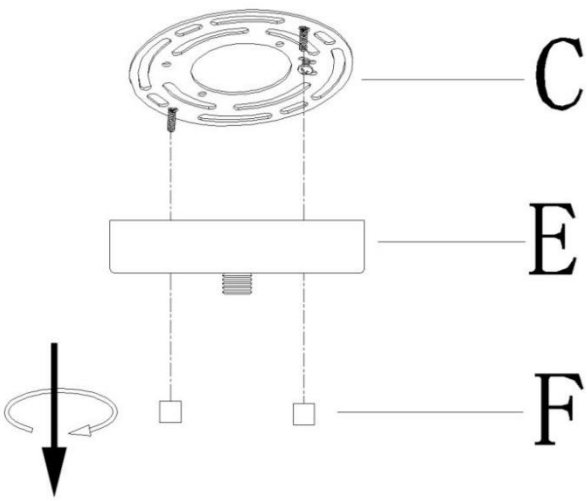

3. Screw stem (I) onto sockets assembly (J).

   Pass the fixture wires through upper frame (H) and tube (G), then screw tube (G) onto stem (I) to secure upper frame (H).

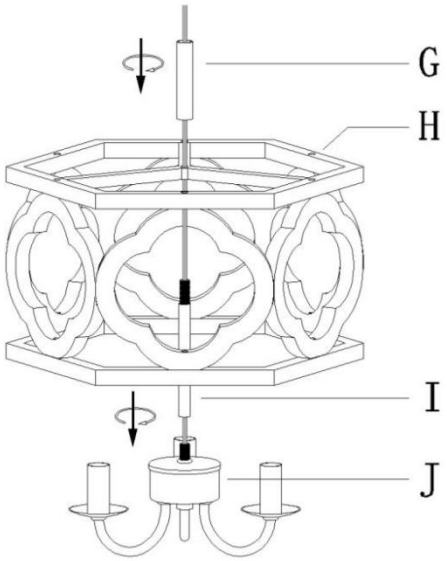

4. Pass the fixture wires through canopy (E), then screw canopy (E) onto tube (G).

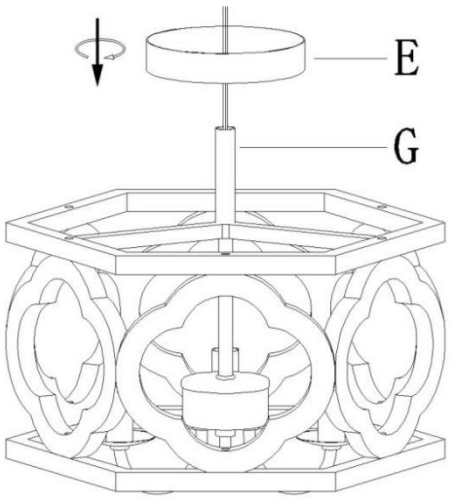

5. Turn off power

Before you start the installation, NEVER attempt any work without shutting off the electricity until the work is done.

A) Go to the main fuse, or circuit breaker, box in your home. Place the main power switch in the "OFF" position.

B) Place the wall switch in the "OFF" position.

6. Carefully pass the supply wires through mounting plate (C).

   Secure mounting plate (C) to the outlet box with mounting screws (B).

   NOTE: the side of mounting plate (C) marked "GND" must face out.

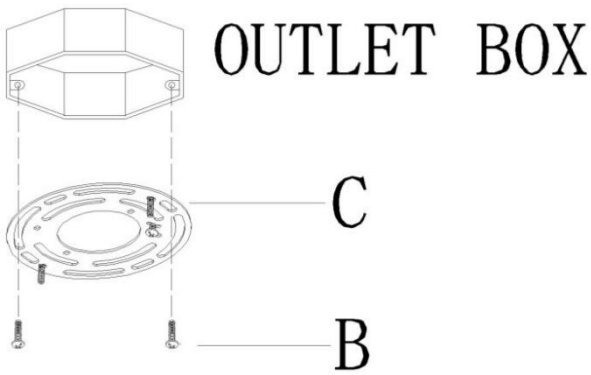

7. Make wire connections

   Connect wires as below wires connection shown. ***PLEASE NOTE THAT GROUND WIRE IS BARE COPPER WIRE, NEVER CONNECT OTHER WIRES TO GROUND WIRES.***

Connect ground wires according to the below chart

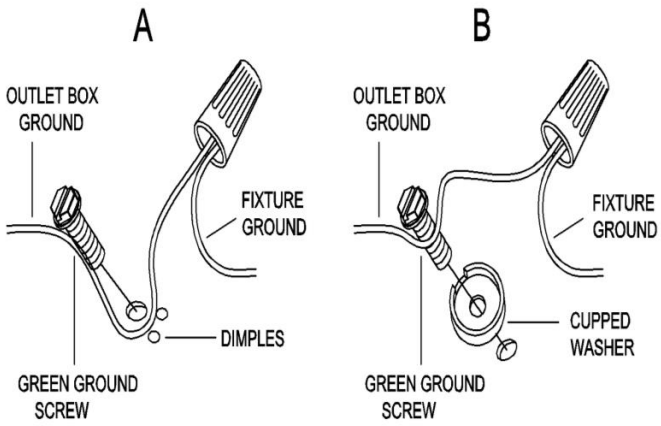

Connect wires according to the below chart

Connect Black or Red Supply Wire to:	Connect White Supply Wire to:
Black	White
*Parallel cord (round & smooth)	*Parallel cord (square & ridged)
Clear,Brown,Gold or Black without tracer	Clear,Brown,Gold or Black with tracer
Insulated wire (other than green) with copper conductor	Insulated wire (other than green) with silver conductor

*Note: When parallel wires (SPT I & SPT II) are used. The neutral wire is square shaped or ridged and the other wire will be round in shape or smooth (see illus.)

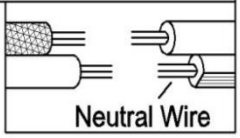

Twist wires together with plastic wire connectors until tightly joined, and wrap each connector with approved electrical tape. Be sure that no wire strands are exposed and then carefully tuck all wires into the outlet box.

8. Raise canopy (E) over the outlet box. Align canopy (E) with the pre-assembled mounting screws, then secure canopy (E) with the previously removed knob nuts (F) till snug.

   Note: canopy (E) should be snug against the ceiling and knob nuts (F).

   If not, adjust the threaded length on mounting plate assembly (C) by unscrewing the pre-assembled hex nuts and then screwing the pre-assembled screws in or out of mounting plate (C) until the secure length is achieved.

   Tighten the hex nuts and back to step 8.

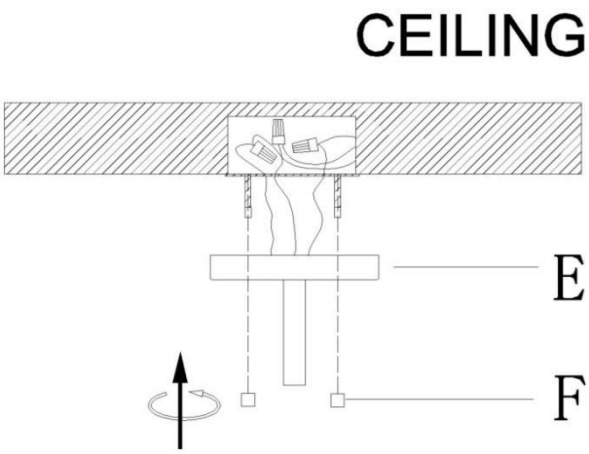

9. Install bulbs (not included) (Please do not exceed the maximum wattage recommended on the socket.)

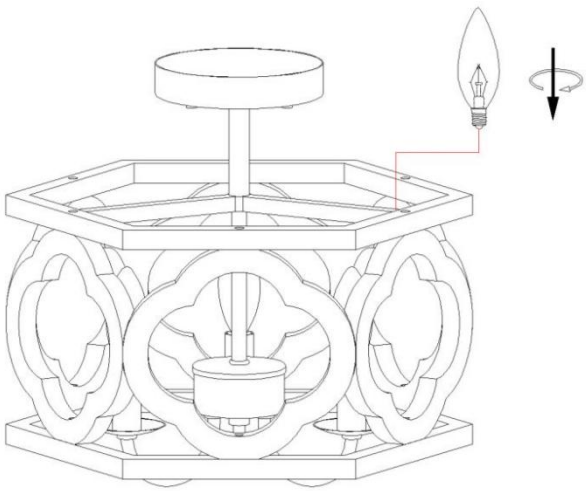

10. Check everything is already installed properly, then you could turn on the light. Enjoy!

ORDERING PARTS

Keep this sheet for future reference in case you need to order replacement parts. All parts for this fixture can be ordered from the place of purchase. Be sure to use exact wording from illustration when ordering parts.

CLEANING

To clean, wipe the fixture with a soft cloth. Do not use abrasive materials such as scouring pads or powders, steel wool or abrasive paper.