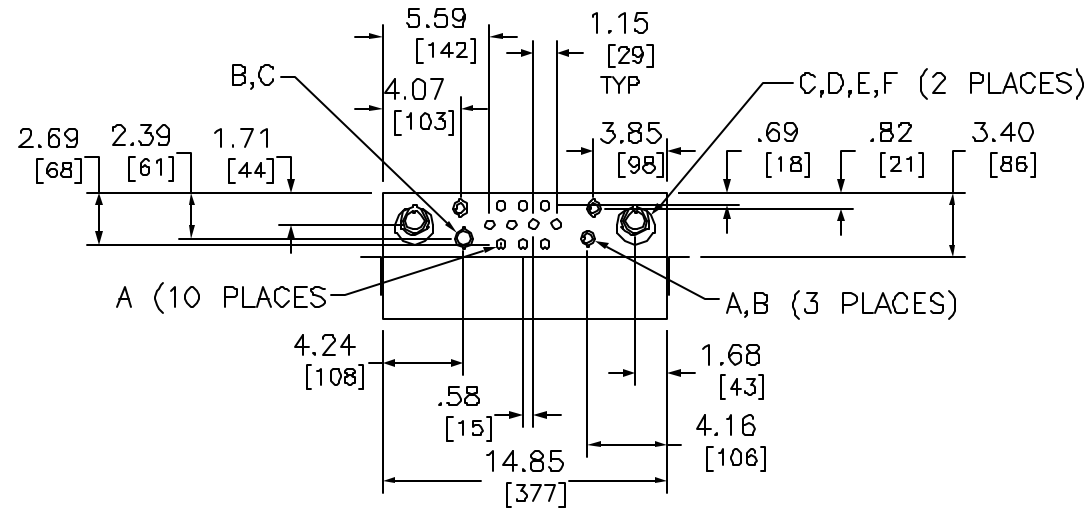

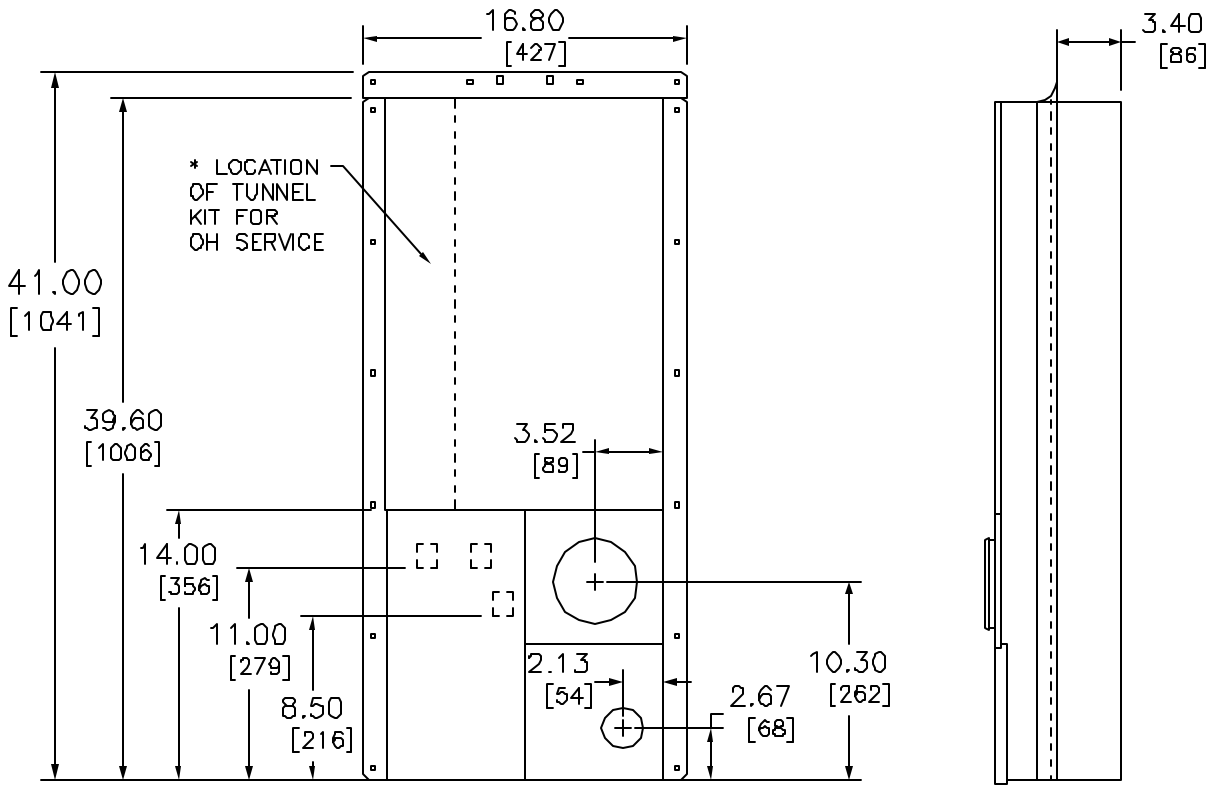

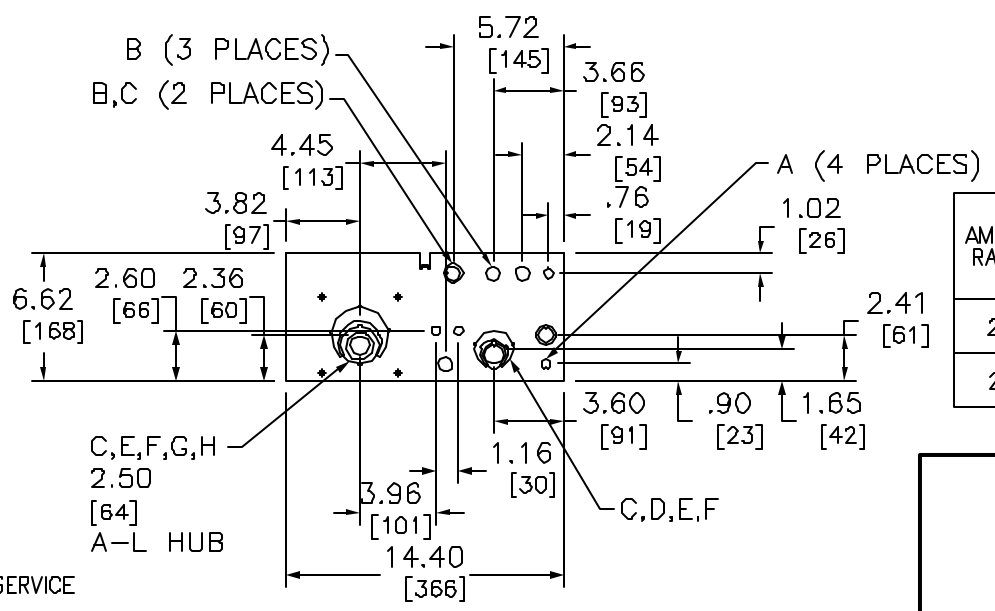

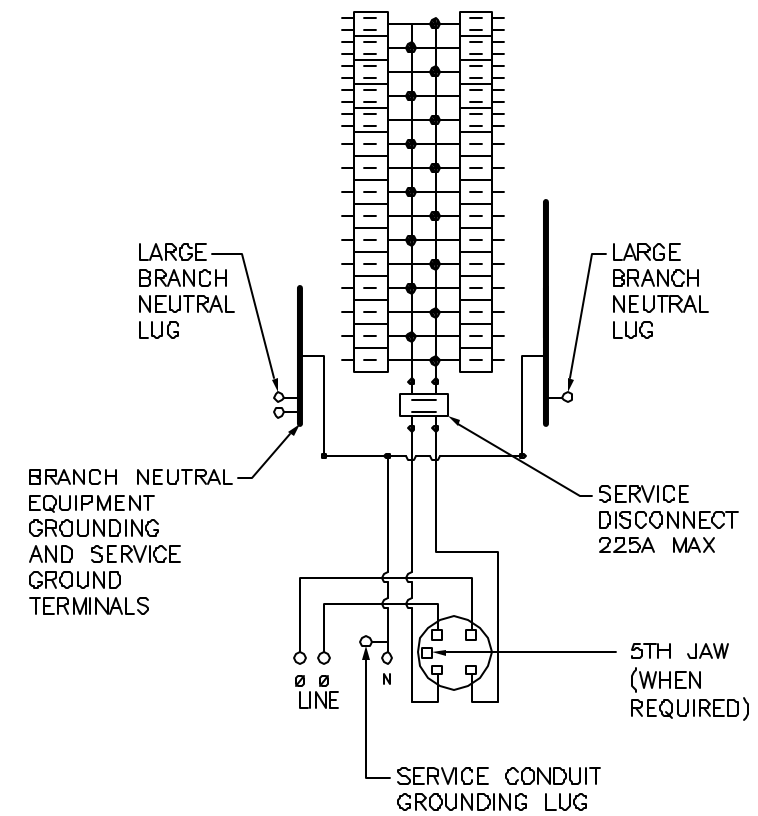

KNOCKOUTS		
SYMBOL	CONDUIT SIZE IN	CONDUIT SIZE MM
A	.50	13
B	.75	19
C	1.00	25
D	1.25	32
E	1.50	38
F	2.00	51
G	2.25	64
H	3.00	76

ONE SINGLE POLE, ONE PLUG-ON SPACE TYPE HOM ONLY. TWO POLE TYPE HOM OR HOMA (15-125A) MAY PLUG ON TWO ADJACENT SPACES.
TWO POLE TYPE HOMA (150-200A) MAY PLUG ON FOUR ADJCENT SPACES. TOTAL CIRCUIT BREAKER HANDLE RATING NOT TO EXCEED 160A PER BRANCH CIRCUIT CONNECTOR.

TWO SINGLE POLE, ONE PLUG-ON SPACE TYPE HOMT OR ONE SINGLE POLE TYPE HOM. TWO POLE TYPE HOM (15-100A) MAY PLUG ON TWO ADJACENT SPACES.
TWO POLE TYPE HOMA (150-200A) MAY PLUG ON FOUR ADJCENT SPACES. **USE 15-100A AND 150-200A BRANCH BREAKERS ONLY.** TOTAL CIRCUIT BREAKER HANDLE RATING NOT TO EXCEED 160A PER BRANCH CIRCUIT CONNECTOR.

A SQUARE D UL LISTED SECONDARY SURGE ARRESTER MAY PLUG ON TWO ADJACENT SPACES. ORDER CATALOG NO. HOM2175SB

SC3040M200F
SC3040M225F

DUAL DIMENSIONS: INCHES
MILLIMETERS

AMPERE RATING	FACTORY INSTALLED BYPASS TYPE	SHORT CIRCUIT CURRENT RATING	CATALOG NUMBER	SERIES	SPACES	MAXIMUM NUMBER OF SINGLE POLE HOM CIRCUITS	LINE SIDE PHASE & NEUTRAL LUGS (AWG/KCMIL)	LARGE BRANCH NEUTRAL AWG
200	NONE	22K	SC3040M200F	MO1	30	40	#4-250 CU/AL	#14-#4CU #12-#2AL
225			SC3040M225F		30	40		

NOTES:
FINISH - GRAY BAKED ENAMEL POWDER COAT OVER CLEANED GALVANEALED STEEL.
MAXIMUM SYSTEM VOLTAGE: 120/240VAC, 1 Ø 3W
UL LISTED - FILE E-6294.
SUITABLE ONLY FOR USE AS SERVICE EQUIPMENT.
SUITABLE FOR UNDERGROUND/OVERHEAD SERVICE.
MEETS EUSERC SPECIFICATIONS.
* ORDER TUNNEL KIT SEPERATELY (SCTK30) FOR OH SERVICE

COMBINATION SERVICE ENTRANCE DEVICES
RING TYPE
RAINPROOF NEMA TYPE 3R ENCLOSURE
SEMIFLUSH ONLY

SQUARE D
Schneider Electric

DWG# NO. 3194